CCK2141,2,5,8PL

Vintage Shower Pkg. With CC461,2,5,8

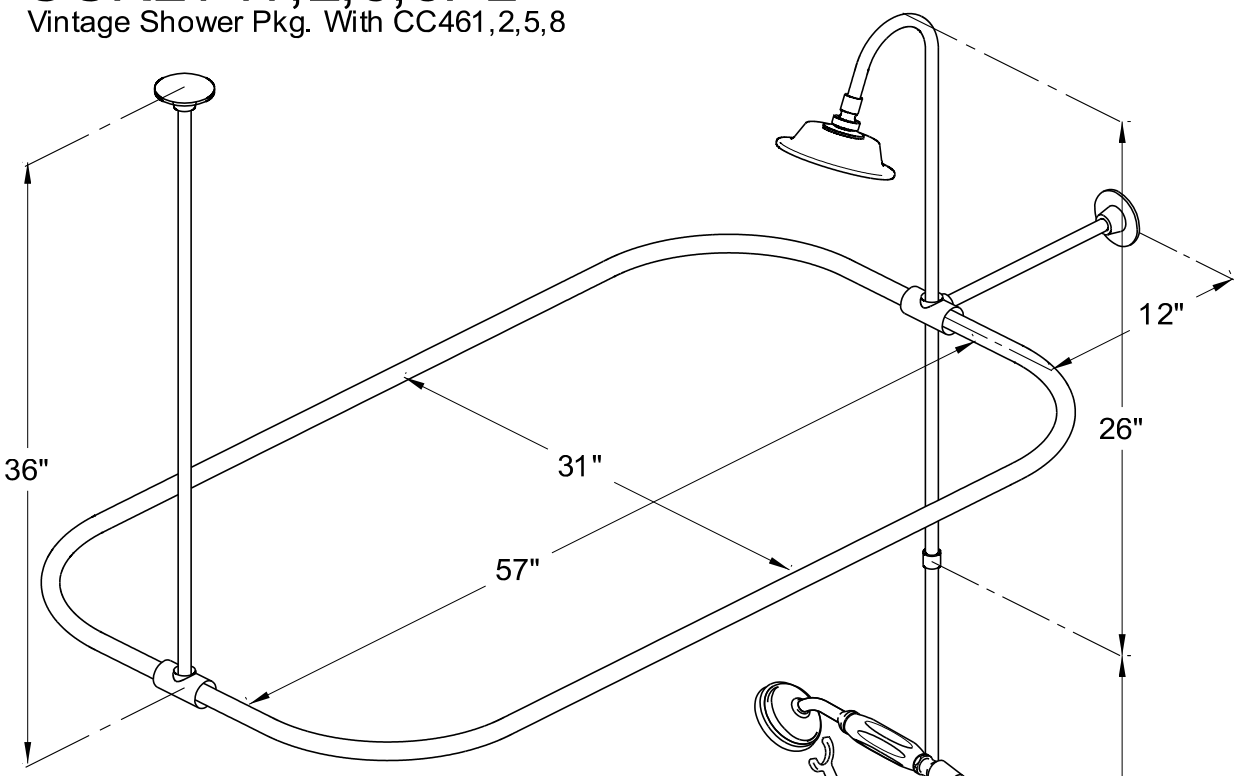

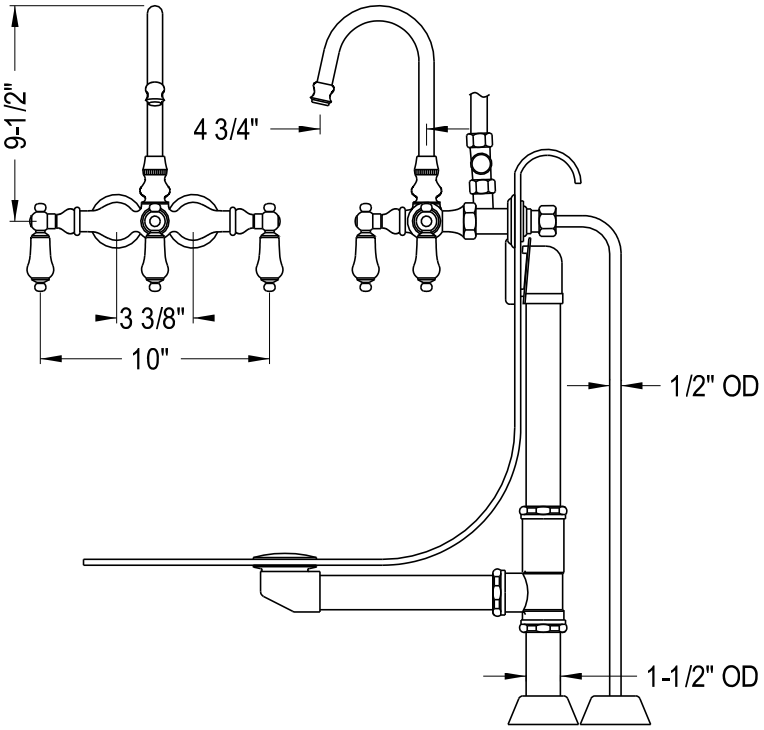

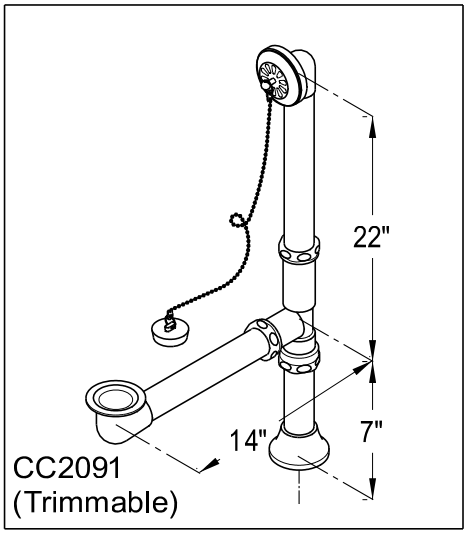

CC2091
(Trimmable)

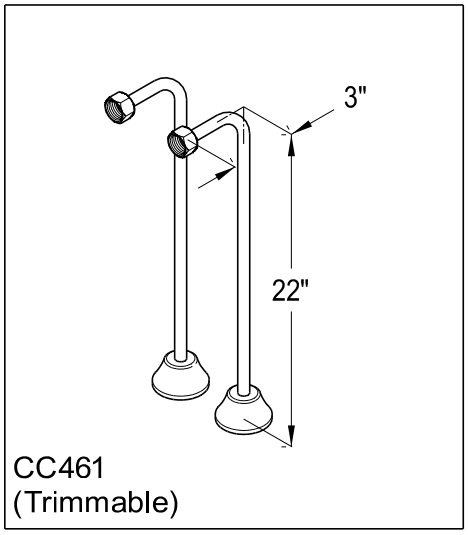

CC461
(Trimmable)