CC1074T1,CC1073T2,5,8
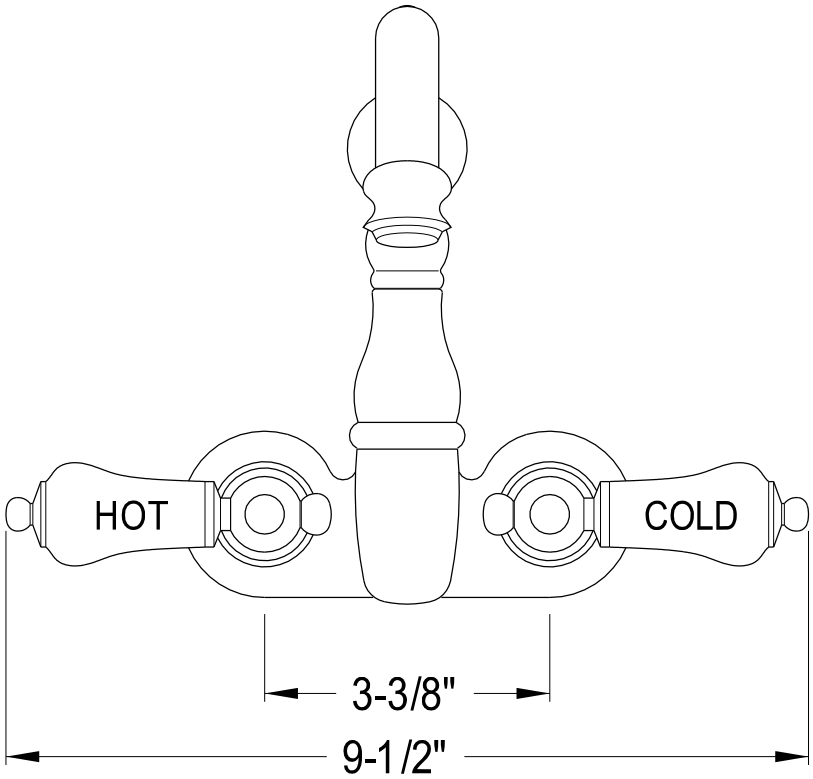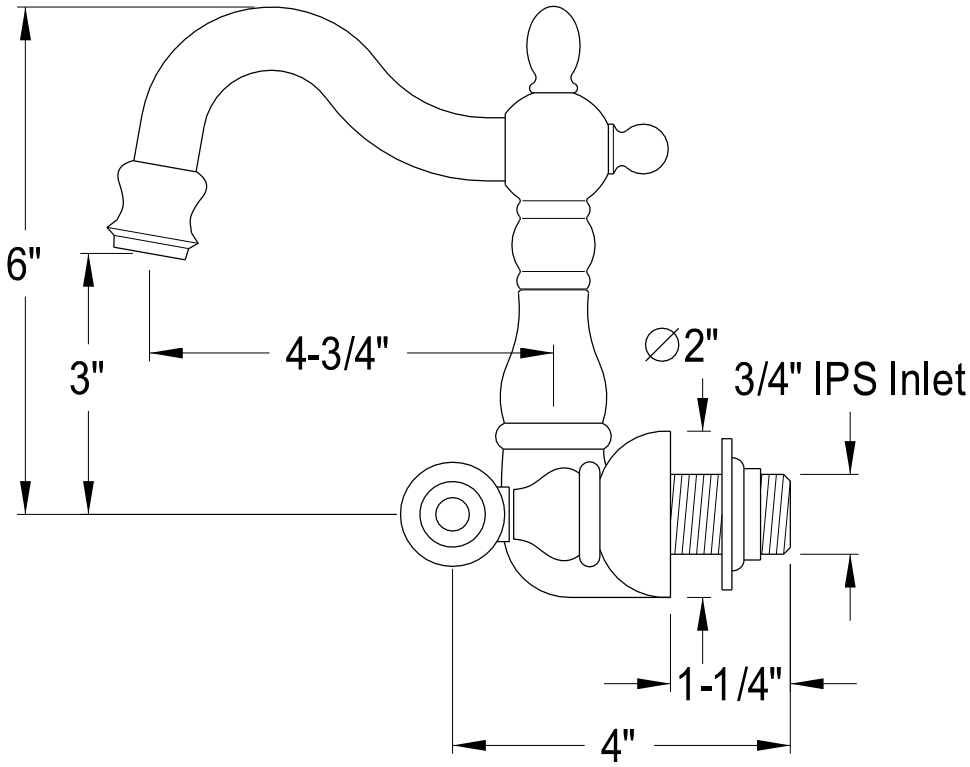
Heritage Leg Tub Filler 3-3/8" Center